Aannemer	ASD HVAC & SANITAIR ASD BVBA Ovenhoek 19, 8800 Roeselare
Project	Bouwen Grensinspectiepost - GIP Skaldenstraat 56 - 9000 GENT

LOT HVAC/SAN

TECHNISCHE FICHE **TF 12** **Datum 5/08/2019**

1. Onderwerp/materiaalomschrijving:
   - materiaal of onderwerp: Vriescel
   - bestekomschrijving artikelnummers: 231 H24
   - merk: Bitzer - Kelvion
   - type: LH135E - SPBE~~35~~ 45-F~~43~~ 32
   - toepassing:

2. Eigen beoordeling van conformiteit van het voorgestelde materiaal:
   - conform aan de bestekomschrijving: **ja**
   - beschrijving en reden van de afwijking t.o.v. het bestek:

3. In bijlage:
   - staal **neen**
   - algemene beschrijving (# blz.) **neen**
   - technische documentatie (# blz) **ja**
   - berekeningsnota's (# blz) **neen**
   - plan of schema **neen**

BEOORDELING EN/OF AANMERKINGEN

Conformiteit:
Afwijking:
Variante:
Aanmerkingen:

	Goedkeuring	Gezien
	Ontwerper	Opdrachtgever
Datum		
Handtekening		

Kelvion

DATASHEET

From: 12/3/19 9:49 AM | Kelvion RT Select V 1.1.1 F01 | Enquiry no.: RT-157611 | SKVNAPPZ17

Sales Region:	Europe
Reference:	
Room:	
Enquiry no.:	RT-157611

Küba SP | SPBE 45-F32 Standard

Item: 4463.45-32

Capacity Q_0 [kW]	Air inlet t_{L1} [°C]	Air outlet t_{L2} [°C]	Evaporation t_{mP} [°C]	Temperature difference [K]	Refrigerant	Speed [1/min]
10.07	-20	-22.3	-28	8.0	R449A	1,360

Calculation Mode: Mid point

Air data

Air volume flow	10,020 m³/h
Air throw	32 m
Altitude	0 m
Air inlet rel. humidity	95 %
Air outlet rel. humidity	99 %

Heat exchanger

Surface	33.4 m²
Fin spacing	7 mm
Volume of tubes	9.9 dm³
Temp. at exp. valve	7.9 °C
Superheating temp.	-22.8 °C

Materials

Tubes	Copper
Fins	Alu
Casing	Galv. steel, Alu
End plates	Alu
Max. operating pressure	32 bar

Fan(s)

2 Piece(s): 230 V - 1 Ph - 50 Hz; IP44

Blade diameter	450 mm
Range of temperature	-40 to 40 °C
Sound power	84 dB(A)
Sound pressure at 3 m (2)	62 dB(A)
Optional controller (5)	Phase control, Transformer, Frequency converter

Operating data per fan (3)

Operation mode	AC - 50 Hz
Speed	1,360 1/min
El. Power	270 W
Current draw	1.20 A
Energy eff. class EEC	C

Engine plate data per Fan

Operation mode	AC - 50 Hz
Speed	1,340 1/min
El. Power	300 W
Current draw	1.32 A
Protector	Built in protector, connected

Connections

Inlet	Cu 15 mm
Outlet	Cu 35 mm
Refrigerant distribution	Venturi

Weight (4)

Net weight	86 kg
Gross weight	169 kg

Defrost

Electric defrost	400V-3Ph-N-PE-50/60Hz
Coil	3.18 kW
Drip tray	1.59 kW
Total	4.77 kW

Dimensions (4)

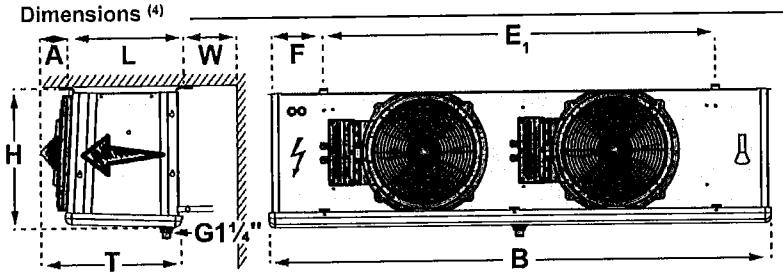

H	657 mm	B	2,230 mm	T	613 mm	L	510 mm	F	200 mm	W	400 mm	A	118 mm
E_1	1,830 mm												

Color of casing = RAL 9010

Packing dimension (HxBxT) = 875 x 2,340 x 790 mm

BITZER Output data

Created on : 07.10.2019 11:51:05

BITZER Output data

Created on : 07.10.2019 11:50:01

Table of content

Project survey 3
Selection: Condensing Units 4
Technical Data: LH135E/4PES-15Y 5
Information: Condensing Units 6

Project survey

Selected compressors

Condensing Units	1x	LH135E/4PES-15Y

Selection: Condensing Units

Input Values

Unit type	LH135E/4PES-15Y
Series	Standard
Refrigerant	R449A
Reference temperature	Dew point temp.
Evaporating SST	-28,00 °C
Ambient temp.	32,0 °C
Suction gas temperature	20,00 °C
Useful superheat	100%
Operating mode	Auto
Power supply	400V-3-50Hz
Capacity control	100%

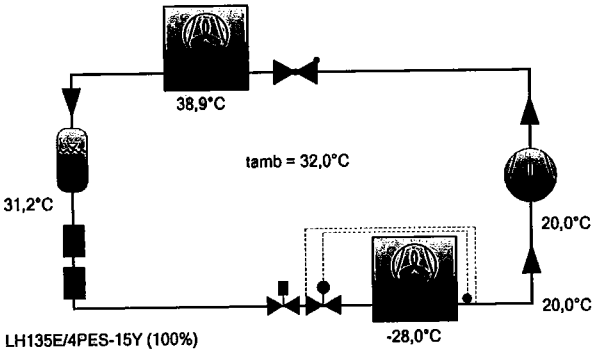

Result

Capacity steps	100%
Cooling capacity	9,68 kW
Evaporator capacity	9,68 kW
Power input	5,99 kW
Current (400V)	12,68 A
Voltage range	380-420V
Mass flow	197,2 kg/h
Condensing SDT	38,9 °C
Liquid subcooling	2,99 K
Operating mode	Standard

Tentative Data.
Power input including fan power absorbtion

Application Limits 1 LH135E/4PES-15

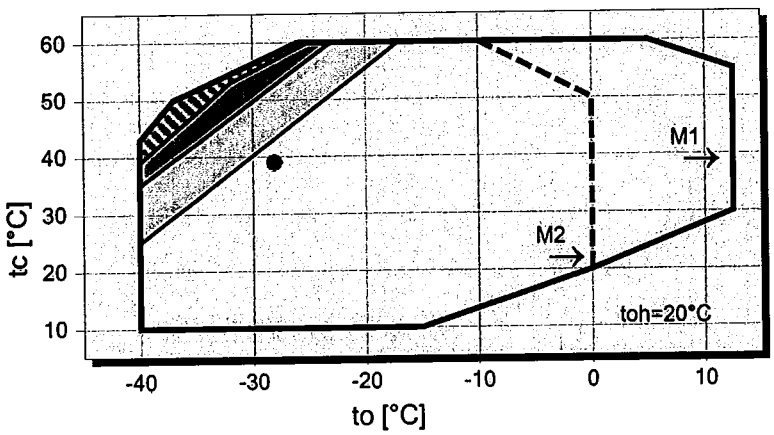

Legend

- additional cooling or max. toh <0°C
- additional cooling or suction gas superheat ≤20K
- additional cooling & suction gas superheat ≤20K
- M2: motor 2
- M1: motor 1
- ● A

Technical Data: LH135E/4PES-15Y

Dimensions and Connections

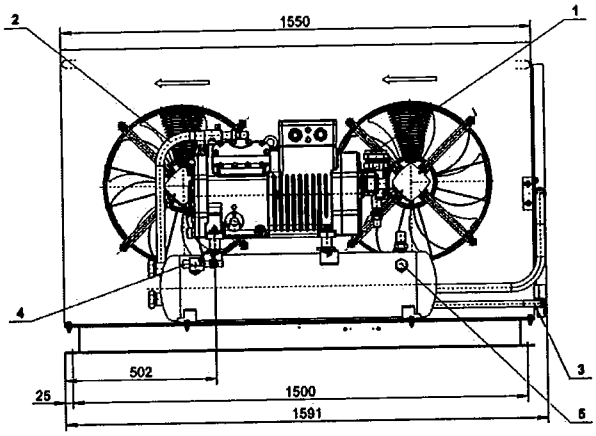

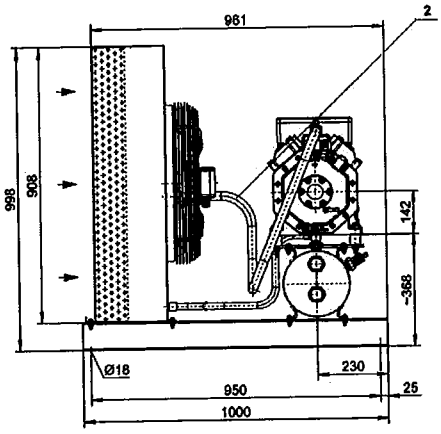

Technical Data

Technical Data	
Weight	303 kg
Total width	1591 mm
Total depth	1000 mm
Total height	998 mm
Connection suction line	42 mm - 1 5/8"
Connection liquid line	22 mm - 7/8"
Fans: Number	2xEC
Voltage (50Hz, more on request)	230V-1-50Hz (Standard)
Current / Power consumption of each fan (50Hz)	1,6 A / 315 W
Air flow condenser 50Hz	10400 m³/h
Voltage (60Hz, more on request)	230V-1-60Hz (Standard)
Current / Power consumption of each fan (60Hz)	2,0 A / 340 W
Air flow condenser 60Hz	10400 m³/h
Coil Volume	4,9 dm³
Receiver type (Standard)	F302H
Max. refrigerant charge 90% at 20°C / 68°F	
R22	32,7 kg
R134a	33,1 kg
R407C	31,3 kg
R404A/R507A	28,8 kg
R407A	31,6 kg
R407F	30,7 kg
R448A	30,1 kg
R449A	30,2 kg
R450A	32,2 kg
R513A	33,1 kg
Extent of Delivery (Standard)	
Discharge line	Standard
Protective charge	Standard
Available Options	
Oil separator	Option
Check valve	Option
High & low pressure switch	Option
Dressed unit	Option
Weather protective housing	Option
Compressors	
Data of compressors: see compressor program	

Condensing Units

Motor 1 = e.g. LH..E/4TES-12 with 12 "HP", primary for air-conditioning (e.g. R22,R407C) and medium temperature application (e.g. R134a, R407F, R407A, R404A, R507A, R22) and air-conditioning with R134a at high ambient temperatures.
Motor 2 = e.g. LH..E/4TES-9 with 8 "HP", for medium and low temperature application (e.g. R134a, R407F, R407A, R404A, R507A, R22) and air-conditioning with R134a.

For more information concerning the application range use the "limits" button.

Operation modes for LH..E/4VES-7 to LH../6HE-28 with R22

CIC = liquid injection with low temperature application, suction gas cooled motor

Specifications for sound emission Ecostar

The data are based on 50 Hz operation with R404A.
Soundpressure: Data are valid for free field conditions according to EN13487 with a block-shaped reference area in a distance of 10m.
For further informations see technical information for sound data.

Legend of connection positions according to "Dimensions":

1 Suction gas valve
2 Discharge gas line
3 Condensate line
4 Refrigerant outlet (liquid line)
5 Pressure relief valve connection
6 Liquid injection (operation without liquid subcooler and with thermostatic expansion valve)
7 Refrigerant inlet at liquid subcooler
8 Refrigerant outlet at liquid subcooler
9 Suction gas line
10 Sight glass
11 Load suspension points
12 Plug for screwed cable gland
13 Cable bushing (for cables ø 9-17 mm) (only ECOLITE)
Dimensions can show tolerances according to EN ISO 13920-B.

Code produit

P/N	Description	Maximum number of devices controlled/variables logged
BMEST**RS0 (*)	boss-mini Monitoring System Standard Capacity - Headless	30/300
BMEST**RE0 (*)	boss-mini Monitoring System Standard Capacity - Headless	50/500
BMEST**LE0 (*)	boss-mini Monitoring System Extended Capacity - Wi-Fi / Video Output	50/500
BMHST00XS0	boss Monitoring System Standard Capacity	100/1500
BMHST00XE0	boss Monitoring System Extended Capacity	300/3500

Code accessoires

P/N	Description
BMEST01P00 (*)	Credit for 1 Plug-in for boss-mini
BMEST03P00 (*)	Credit for 3 Plug-ins for boss-mini
BMESTDNA0K (*)	DIN rail mounting bracket kit for boss-mini
BMESTPWA00 (*)	Power supply for boss-mini, multi-country plug - 110-230Vac / 24Vdc
PGTA00TRX0 (*)	Power supply for boss-mini DIN rail - 110-230Vac / 24Vdc
BMESTRLA00 (*)	boss-mini relay expansion module
BMHST01P00	Credit for 1 Plug-in for boss
BMHST03P00	Credit for 3 Plug-ins for boss
BMHST05P00	Credit for 5 Plug-ins for boss
BMHSTDNA0K	DIN rail mounting bracket kit for boss
BMHSTMDA00	UMTS modem for sending SMS for boss / boss-mini

Functionality

	Functions	BMHST**XE0 / BMHST**XS0	BMEST**LE0	BMEST**RS0 /BMEST**RE
HARDWARE	Integrated Wi-Fi connectivity to mobile devices	YES	YES	NO
	Video output	YES: VGA / Display Port	YES: micro HDMI	NO
	Double Ethernet port (separation of LAN / Internet connections)	Yes		
	Integrated backup memory expansion	YES with uSD memory	YES with SD memory	
	Embedded RS485 ports	2 opto-isolated	1 opto-isolated, 1 not opto-isolated	
	Integrated digital input	YES	NO	
	Temporary IP address reset button	NO	YES	
	Integrated digital outputs	3 relays with changeover contacts	3 voltage outputs @ +24Vdc	
	USB host ports	6 (2 front and 4 rear)	1	
	Status LED	8 at front (on/off, alarm, 2 RS485 ports, 3 relays, digital input)	2 at front (on/off, alarm)	
	Possibility to connect an external UMTS modem to send SMS messages	Yes		
	Power supply	100-240 V~ 50-60 Hz (power supply module input)	24Vdc	
	Operating temperature	from 5 to 45 ° C		
SOFTWARE	All pages responsive	Yes		
	Graphic customisation with HTML5 / SVG technology	YES (using c.web tool)		
	Web connection with encrypted protocol (HTTPS)	Yes		
	Third-party device integration	YES (using device creator tool)		
	Minimum variable sampling time	5 sec	30 sec	
	Modbus RTU Master protocol	Yes		
	Modbus TCP/IP Master protocol	Yes		
	Data synchronisation with RemotePRO	YES (cost 1 plug-in credit)		
	BACnet Master Protocol (MSTP and TCP/IP)	YES (cost 1 plug-in credit)		
	BACnet Slave Protocol (TCP/IP)	YES (cost 1 plug-in credit)		
	Modbus RTU or TCP/IP Slave protocol	YES (cost 1 plug-in credit)		
	XML Slave protocol (*) (**)	YES (cost 1 plug-in credit)		
	Custom logic development by customer	YES (cost 1 plug-in credit)		
	Logical devices / logical variables	YES (cost 1 plug-in credit)		
	Performance index	YES (cost 1 plug-in credit)		
	Energy consumption control and management	YES (cost 1 plug-in credit)		
	Suction pressure optimisation	YES (cost 1 plug-in credit)		
	Parameter control	YES (cost 1 plug-in credit)		
	Compressor rack safe restart	YES (cost 1 plug-in credit)		
	Dew point broadcast	YES (cost 1 plug-in credit)		
	HVAC unit free cooling optimisation	YES (cost 1 plug-in credit)		
	Air-conditioning on/off optimisation	YES (cost 1 plug-in credit)		
	Optimised lighting management based on outside light	YES (cost 1 plug-in credit)		
	Optimised unit capacity management (*) (**)	YES (cost 1 plug-in credit)		
	Maximum number of extra functions that can be enabled (plug-ins)	20	3	
	Send email	Yes		
	Send instant messages (Telegram)	Yes		
	Send SMS	Yes		
	Manual and/or automatic reports in CSV and PDF format	Yes		
	Scheduled activity management	Yes		

(*) Available from October 2018
(**) For BMH* part numbers available from December 2018

Aannemer	ASD HVAC & SANITAIR — ASD BVBA Ovenhoek 19, 8800 Roeselare
Project	Bouwen Grensinspectiepost - GIP Skaldenstraat 56 - 9000 GENT

LOT HVAC/SAN

TECHNISCHE FICHE **TF 13** **Datum 5/08/2019**

1. Onderwerp/materiaalomschrijving:
   - materiaal of onderwerp: Stalen leidingen
   - bestekomschrijving artikelnummers: 239 H32
   - merk: Geberit
   - type: Mapress
   - toepassing:

2. Eigen beoordeling van conformiteit van het voorgestelde materiaal:
   - conform aan de bestekomschrijving: **ja**
   - beschrijving en reden van de afwijking t.o.v. het bestek:

3. In bijlage:
   - staal **neen**
   - algemene beschrijving (# blz.) **neen**
   - technische documentatie (# blz) **ja**
   - berekeningsnota's (# blz) **neen**
   - plan of schema **neen**

BEOORDELING EN/OF AANMERKINGEN

Conformiteit:
Afwijking:
Variante:
Aanmerkingen:

	Goedkeuring	Gezien
	Ontwerper	Opdrachtgever
Datum		
Handtekening		

GEBERIT

Geberit Mapress C-staal buis buiten verzinkt, grote bundel

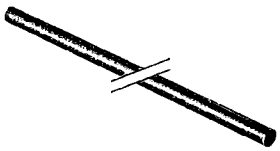

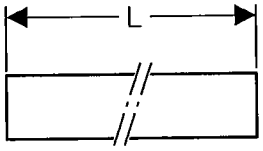

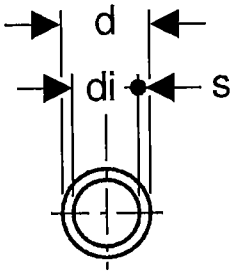

Gebruik

- Voor gebouwtechniek, industrie en scheepsbouw
- Toepassingsoverzicht: Geberit Mapress C-staal

Kenmerken

- Buiten verzinkt

Technische gegevens

Materiaal	Staal ongelegeerd 1.0034 E195 (EN 10305)
Oppervlakteruwheid	10 µm
Warmte-uitzetting	0,012 mm/(m · K)
Thermische geleidbaarheid buis	60 W/(m · K)

Artikel

Art. nr.	DN	d, ø [mm]	di, ø [mm]	s [mm]	L [m]
29101	10	12	9,6	1,2	6
29102	12	15	12,6	1,2	6
29103	15	18	15,6	1,2	6
29104	20	22	19	1,5	6
29105	25	28	25	1,5	6
29106	32	35	32	1,5	6
29107	40	42	39	1,5	6
29108	50	54	51	1,5	6
29159	65	76,1	72,1	2	6
29160	80	88,9	84,9	2	6
29161	100	108	104	2	6